EVAPORADORES – Serie D

DD Media Temperatura (-2oC a -18oC) / DJ Baja Temperatura (-18oC a -31oC)

Model	Nominal refrigerating capacity	Surface for vaproizing	Power	Air fans 380V/220V		Air throw	Electric defrosting 220V		Connection tube dimensions		G.W	Outline dimensions									Drain
				Air flow	Diameter		whirlabout pipe	Water pipe	Inlet	Outlet		A	B	C	D	E	F	E1	E2	E3	
	W	m^2	W	m^3/h	mm	m	KW	KW	mm(ϕ)	mm(ϕ)	Kg	mm	mm	mm	mm	mm	mm	mm	mm	mm	Inch
HDD-007	1400	7	1×90	1×2000	350	9	1×0.6	0.6	12	16	26	750	400	460	270	540	100	/	/	/	3/4"
HDD-010	2000	10	1×90	1×2000	350	9	1×0.9	0,9	12	16	33	750	450	460	320	540	100	/	/	/	3/4"
HDD-012	2400	12	2×90	2×2000	350	9	2×0.9	0,9	12	16	33	1050	400	460	320	820	110	/	/	/	3/4"
HDD-015	3000	15	2×90	2×2000	350	9	1×1.3	1,3	12	16	48	1150	400	460	270	930	105	/	/	/	3/4"
HDD-030	6000	30	2×250	2×3000	400	12	2×1.3	1,3	16	25	65	1460	450	565	320	1170	100	/	/	/	3/4"
HDD-060	12000	60	2×270	2×6000	450	12	5×1.3	1,3	19	38	167	1930	580	620	420	1640	100	820	/	/	3/4"
HDJ-008	1300	8	1×90	1×2000	350	9	1×0.9	0,9	12	16	33	1050	400	460	320	820	110	/	/	/	3/4"
HDJ-010	1800	10	2×90	2×2000	350	9	1×1.3	1,3	12	16	48	1150	400	460	270	930	100	/	/	/	3/4"
HDJ-025	5000	25	2×250	2×2000	400	12	2×1.3	1,3	16	25	65	1630	450	565	320	1340	100	/	/	/	3/4"

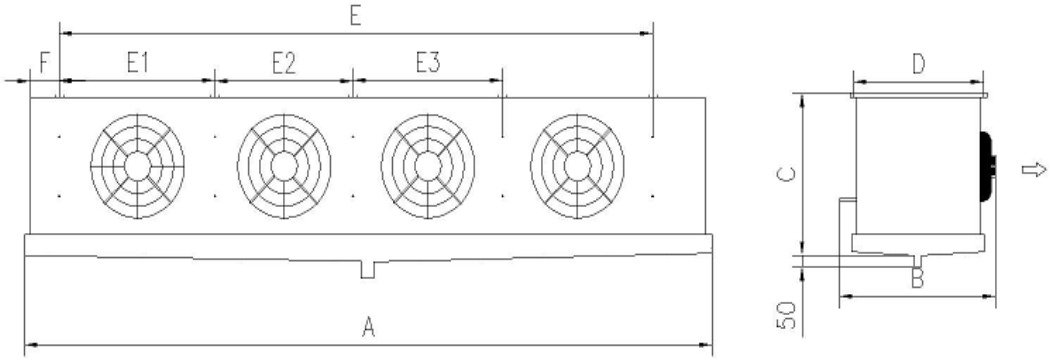

COOLTECH